DELIVERY OVERVIEW, AW® BITS AND XZN MULTI-TOOTHED BITS

AW Drive
AW Drive System

Advantages over previous drive systems:
- Improved power transmission
- Longer service life.
- Optimum centering
- Largest possible contact surface of bit in screw drive → ejection forces.
- Ejection forces (comeout) virtually zero. Even force distribution prevents damaging of the surface-protection coating and therefore ensures better resistance to corrosion.

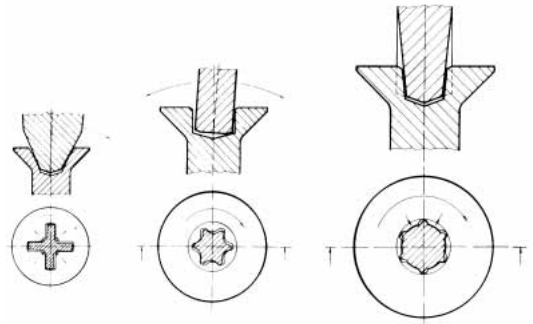

previous drive systems AW drive

AW-Bits

ASSY 0151 ... 0152 ... 0153 ... 0154 ... 0155 ... dia. Thread	ASSY A2 0159 ... Ecofast ASSY 0165 ... 0166 ... dia. Thread	Isotop ASSY 0164 ... ASSY SK ASSY Kombi 0184 ... dia. Thread	Amo III 0234 ... Jamo 0234 ... D+F-Anker 0233 ... dia. Thread	ZEBRA pias 0205 ... 0206 ... dia. Thread	Sheet-metal screw 0111 ... 0112 ... 0113 ... 0127 ... dia. Thread	ASSY 3.0 SK 0184 8... ASSY plus VG 0165 3... dia. Thread	AW size	ZEBRA 1/4" 25 mm	1/4" 25 mm	5/16" 32 mm	5/16" 110 mm	Würth Bosch Skil Ingersoll Hitachi Black & Decker AEG Metabo Makita Deprag Atlas-Copco Elu 1/4" 50 mm	Screw connection units VSG 219 Würth 1/4" 70 mm	Würth Bosch Skil Ingersoll Hitachi Black & Decker AEG Metabo Makita Deprag Atlas-Copco Elu 1/4" 110 mm	AW Bits for magazine assembly MSVW 1 Würth Bosch 1/4" 155 mm	AW Bits for magazine assembly MSVW 2 Würth Bosch 1/4" 168 mm	AW Bits for magazine Screw attachment S50-TB Würth Kress Eibenstack 1/4" 176,5 mm	Würth Fein Baier AEG 7 mm 53 mm	Screw conn. units Elec. screwdrivers M4 45 mm	Screw conn. units Elec. screwdrivers M5 33 mm	Screw conn. units Elec. screwdrivers M5 45 mm	Screw conn. units Elec. screwdrivers M6 33 mm	Screw conn. units Elec. screwdrivers M6 45 mm
								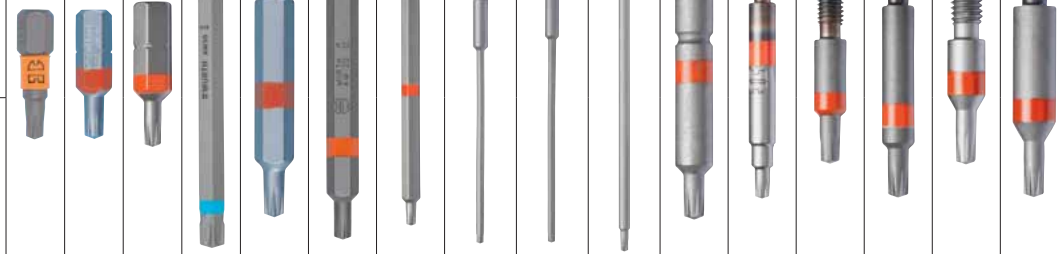															
								0614 ...	0614 ...	0614 ...	0614 ...	0614 ...	0614 ...	0614 ...	0614 ...	0614 ...	0614 ...	0614 ...	0614 ...	0614 ...	0614 ...	0614 ...	0614 ...
3,0	3,0	–	–	2,9 3,5	2,9 3,5	–	AW 10	125 10	511 0*	–	–	521 0	–	581 0	–	–	–	531 0	441 0	561 0	541 0	–	–
3,5 4,0 4,5 5,0	3,5 4,0 4,5 5,0	–	–	3,9 4,2	3,9 4,2	–	AW 20	125 20	512 0*	552 0	–	522 0	572 0 1)	582 0	100 220 **	100 320 **	100 420 **	532 0	–	562 0	542 0	612 0	622 0
–	–	–	–	4,8 5,5	4,8 5,5	–	AW 25	125 25	512 5*	552 5	–	522 5	–	582 5	–	–	–	532 5	–	562 5	–	612 5	622 5
6,0 7,0	6,0 7,0	6,0	6,0 7,0 7,5	6,3	–	–	AW 30	125 30	513 0*	553 0	–	523 0	573 0 1)	583 0	–	–	–	–	–	–	–	–	–
8,0 10,0 12,0	8,0 10,0 12,0	8,0	–	8,0	–	–	AW 40	–	514 0	554 0	–	524 0	574 0 1)	–	–	–	–	–	–	–	–	–	–
–	–	–	–	–	–	10,0 12,0	AW 50	–	–	*** 550 50	550 110	–	–	–	–	–	–	–	–	–	–	–	–
								P. Qty.: 10 pc	P. Qty.: 10 pc	P. Qty.: 1/5 pc									P. Qty.: 5 pc.				

1) = Also suitable for SFS CF 200 screw connection unit

* = P. Qty.: 10/100 Qty. ** = P. Qty: 1/3 St. *** = length 50 mm

XZN-Bits

	5/16" L = 50 mm
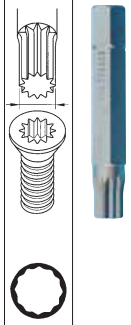	
Size	0614 ...
M5	786 055
M6	786 065
M8	786 085
M12	786 125
P. Qty.: 1/5 pc	

WÜRTH